REV	DATE	DESCRIPTION
B	4-26-07	Redrawn
C	4-30-07	added hose size ranges
D	6-30-08	mat'l was nylon 66, SS nipple

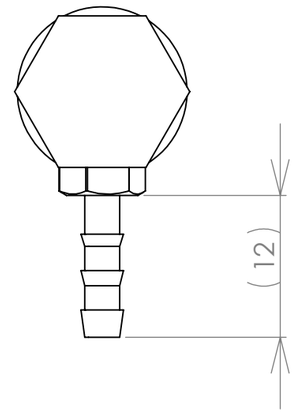

for 1/16" - 1/8" ID hose
C

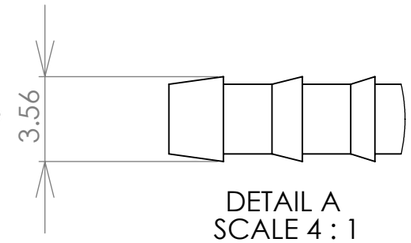

DETAIL A
SCALE 4 : 1

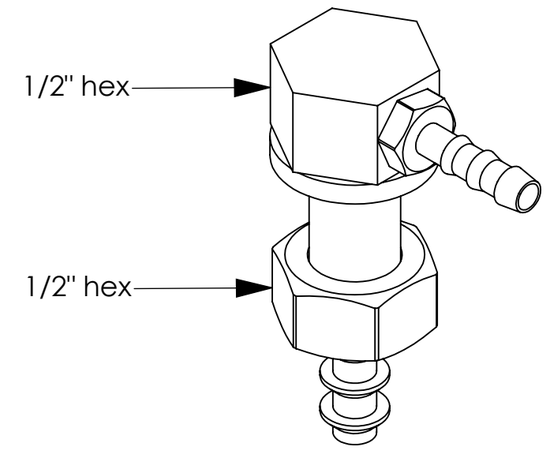

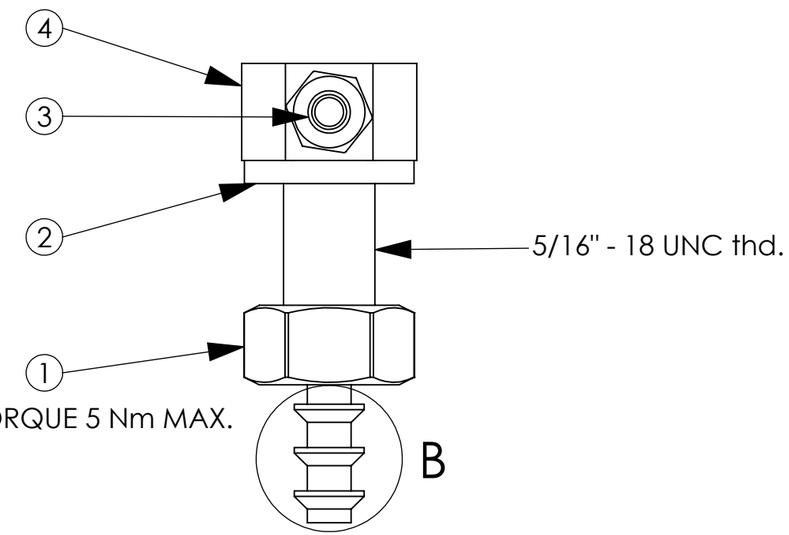

5/16"-18: TORQUE 5 Nm MAX.

A

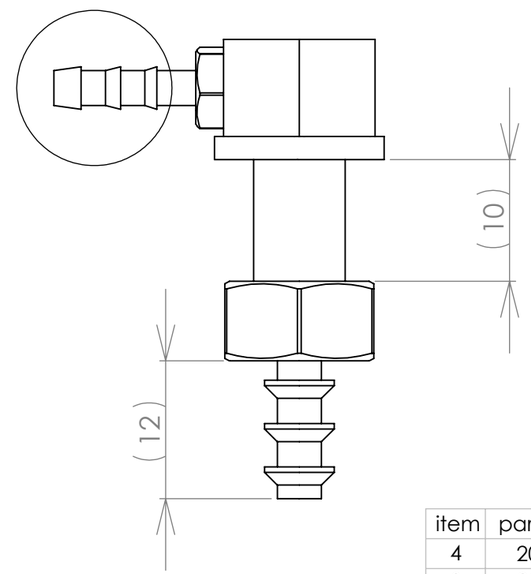

max. clamping length

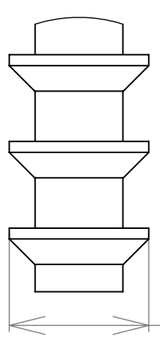

5.84 for 1/8" - 3/16" ID hose
C

DETAIL B
SCALE 4 : 1

item	part number	description	material	qty
4	2002504	bulkhead fitting body	Nylon 66 30% GF D	1
3	2002503	nipple	CR3601, Ni plate D	1
2	2002502	gasket	neoprene	1
1	2002501	5/16" - 18 UNC hex nut	stainless steel	1

UNLESS OTHERWISE SPECIFIED:

DIMENSIONS ARE IN MM
TOLERANCES PER ISO 2768-1
CLASS M
3rd ANGLE PROJECTION

	NAME	DATE
DRAWN	MP	4-26-07
CHECKED	MP	4-26-07
ENG APPR.	MP	4-26-07

COMMENTS:

WEXCO Industries

TITLE:

Bulkhead fitting kit

PROPRIETARY AND CONFIDENTIAL

THE INFORMATION CONTAINED IN THIS DRAWING IS THE SOLE PROPERTY OF WEXCO INDUSTRIES. ANY REPRODUCTION IN PART OR AS A WHOLE WITHOUT THE WRITTEN PERMISSION OF WEXCO INDUSTRIES IS PROHIBITED.

INTERPRET GEOMETRIC TOLERANCING PER: ISO 2768-1 M

MATERIAL: see table

FINISH: DNA

APPLICATION: wet arms

SIZE: B | DWG. NO. 200250 | REV D

SCALE: 2:1 | WEIGHT: | SHEET 1 OF 1